Pallas®

COMMERCIAL & DOMETIC RO

PALLAS PLUS ESTELLE USER MANUAL

ESLI
Pollet Water Group

CE

DECLARATION OF CONFORMITY

We declare that we manufacture the products listed below in accordance with the requirements of the Low Voltage Directive 2014/35/EU and the EMC Directive 2014/30/EU.

PRODUCT NAME : REVERSE OSMOSIS WATER PURIFICATION SYSTEMS

MODELER : AQUABİR VERA LUX P160 6 AŞAMALI POMPALI, AQUABİR VERA P100 5 AŞAMALI POMPALI, RAVENT KABİNLİ CLASS 5 AŞAMALI POMPALI 2.2 TANK, RAVENT KABİNLİ CLASS 6 AŞAMALI POMPALI 2.2 TANK, RAVENT KABİNLİ LÜX 5 AŞAMALI POMPALI 2.2 TANK, RAVENT KABİNLİ LÜX 6 AŞAMALI POMPALI 2.2 TANK, AQUABİR VERA DYNAMIC STANDLI 6 A POMPALI, AQUABİR VERA DYNAMIC STANDLI 5A POMPALI, RAVENT COOL KABİNLİ CLASS 5A POMPALI 3.2 TANK, RAVENT COOL KABİNLİ CLASS 6A POMPALI 3.2, RAVENT COOL KABİNLİ LÜX 5A POMPALI 3.2, RAVENT COOL KABİNLİ LÜX 6A POMPALI 3.2, RAVENT SLİM KABİNLİ, ICONIC STAR POMPALI 5 AŞAMALI, ICONIC STAR POMPALI 6 AŞAMALI, ICONIC ELİT POMPALI 5 AŞAMALI, ICONIC ELİT POMPALI 6 AŞAMALI, ICONIC PLUS POMPALI 5 AŞAMALI, ICONIC PLUS POMPALI 6 AŞAMALI, ICONIC ELEGAND POMPALI 5 AŞAMALI, ICONIC ELEGAND POMPALI 6 AŞAMALI, PALLAS ENJOY SMART POMPALI 5 AŞAMALI, PALLAS ENJOY SMART POMPALI 6 AŞAMALI, PALLAS ENJOY COOL 5 AŞAMALI, PALLAS ENJOY COOL 6 AŞAMALI, PALLAS ENJOY SLİM

Applicable EU Directives (2014/35/EC) Low Voltage Directive - EMC Directive 2014/30/EC.

APPLICABLE INTERNATIONAL STANDARDS
TS EN 60730-2-15: 2011, TS EN 55014-1:2017, 55014-2:2016 TS EN 61000-3-2:2014, TS EN 61000-3-3:2014, TS EN 60335-1:2012+AC 2014 + A11: 204

ESLİ ENDÜSTRİYEL ÜRÜNLER PAZARLAMA SANAYİ VE TİCARET LİMİTED ŞİRKETİ

Adres : Antalya Organize Sanayi Bölgesi 1. Kısım Antalya Bulvarı No: 36 07190 Döşemealtı / ANTALYA

TEL : 0 850 532 8 786 & 444 7 099

E-MAIL : esli@esli.com.tr

Note: Our declaration becomes null and void if any modifications are made to the device/equipment without our company's authorization.

The product you have purchased complies with the 2014/35/EU standards;

OUR VALUED CUSTOMER

Water Treatment Systems use the Reverse Osmosis system, one of the world's advanced water treatment technologies. Water Treatment Systems are designed to produce drinking water quality water by purifying the physical, chemical and microbiological impurities that may be in your water. Water Treatment Systems produce good quality water not only for drinking water but also for meeting domestic consumption needs. It will allow you to get the real taste of your food and beverages.

With Water Treatment Systems, we safely offer water, which is the most important element of healthy life, to your use. This product is produced in modern facilities that respect the environment without harming the nature. We recommend that you read this user manual carefully and keep it as a reference tool before you start using the product so that you, our valued customer, can get the best efficiency of our product, which has undergone rigorous quality control produced in modern facilities.

WARNING: Our products sold through e-commerce sites are priced "excluding assembly".
Installation is done by our authorized services for a fee. Installation or repair of the water purifier outside the authorized services or opening the device by unauthorized persons invalidates the warranty.

"Thank you for choosing our product.

TABLE OF CONTENTS

GENERAL INFORMATION 2
WORKING PRINCIPLE 3
POINTS TO CONSIDER BEFORE DEVICE INSTALLATION.....4
BOX CONTENTS AND ASSEMBLY PARTS.....5
DEVICE FEATURES 6
DIGITAL DISPLAY INFORMATION.....7
INSTALLATION, ASSEMBLY AND MAINTENANCE OF THE DEVICE 8
WARRANTY CONDITIONS.....13
IMPORTANT SAFETY AND ENVIRONMENTAL INSTRUCTIONS & CONSUMER RIGHTS 14
FAULT DETECTION 15
FREQUENTLY ASKED QUESTIONS 16
WARRANTY.....17

GENERAL INFORMATION

What is Reverse Osmosis?

Reverse osmosis is a water treatment method that works in reverse osmosis. Osmosis is the passage of water between two media separated by a semipermeable membrane, during which water moves from a lower density medium to a higher density medium. Reverse osmosis reverses this process, allowing water to move from a denser toa less dense medium.
In the reverse osmosis system, semi-permeable membranes are used. The pore diameter of these membranes is usually between 8-12 angstroms. Water molecules can pass through these pores because they are small and have a neutral electric charge. However, particles such as plus and minus charged ions, large molecules, bacteria and viruses cannot pass through the membranes because they are larger than 12 angstroms.

In this way, the reverse osmosis system highly filters and de-ionizes water. Reverse osmosis is a highly effective and widely used water treatment technology. The design of the system requires a lot of technical knowledge and experience, such as the desired product water quality, raw water analysis and the type of membrane to be used.

MEANING OF THE SYMBOLS USED IN THE BOOKLET

Important information and advice on using the device

Fire danger warning

Electric shock warning

Warnings about dangerous situations related to safety of life and property

Warning about hot surfaces

Reverse Osmosis applications

Reverse osmosis (reverse osmosis) applications draw attention to the fact that the water purifier is designed to work with minimum water pressure. It does not require the use of chemicals and provides quality water production. It is also manufactured in such a way that it can be easily installed wherever desired with its minimum dimensions.
Reverse osmosis purifier improves the taste and quality of water. In addition to reducing odor and precipitation, it also reduces chlorine by up to 99%. The reverse osmosis device also reduces contaminants such as lead, copper, barium, chromium, mercury, sodium, cadmium, fluoride, nitrite, nitrate and selenium that may be present in the water.
Water purifiers, in accordance with the technical specifications specified in this booklet, when used according to the installation instructions and user manual, will serve economically and efficiently for many years. However, in case of any maintenance or repair needs, it is important to get help from an authorized service. Authorized service ensures trouble-free operation of the device with the use of original spare parts and expert technical knowl edge.
This device should only be used in accordance with the design purpose and technical specifications specified in the brochure and user manual. Maintenance and repairs must be carried out in accordance with the instructions in the user manual and original parts supplied by the authorized service must be used.

PRODUCT PACKAGING INFORMATION

The packaging of the product is made of recyclable materials in accordance with our national legislation.

Packaging waste should not be disposed of together with household or other waste, dispose of at packaging waste collection points.

GENERAL INFORMATION

ION REMOVAL IN REVERSE OSMOSIS SYSTEM

ION AND ORG. PESTICIDE	REMOVAL (%)	ION AND ORG. PESTICIDE	REMOVAL (%)
Aluminum	97-98	Nickel	97-99
Ammonium	85-95	Nitrate	93-96
Arsenic	94-96	Phosphate	99+
Magnesium	96-98	Potassium	92
Bicarbonate	95-96	Radioactivity	95-98
Bromide	93-96	Radium	97
Cadmium	96-98	Selenium	97
Calcium	96-98	Silica	85-90
Chloride	94-95	Silver	95-97
Chromate	90-98	Sodium	92-98
Chromium	96-98	Sulfate	99+
Copper	97-99	Zinc	98-99
Cyanide	90-95	Boron	50-70
Fluoride	94-96	Borate	30-50
Iron	98-99	Mercury	96-98
Lead	96-98	Bacteria	99+
Mangan	96-98	Virus	99+

WORKING PRINCIPLE

PRODUCTION STAGES OF CLEAN WATER IN BENCHTOP REVERSE OSMOSIS SYSTEM

A minimum mains pressure of 3.5 bar (350,000 Pascal) is required for the Reverse Osmosis System to operate. In areas where the mains pressure is insufficient, a pump is supplemented. The water coming from the mains passes through the following stages:

Stage 1: 5 micron pp sediment filter is a pre-torped filter. It protects the subsequent filtrations, especially the membrane filter, by retaining floating substances and particles in the water. (1 mm = 1000 microns)

2nd - 3rd Stage: The block carbon filter removes contamination from the water that is harmful to human health and the membrane filter by retaining organic matter in the water, large amounts of carcinogenic chlorine and chlorine compounds. The block carbon filter is subjected to more sensitive particle filtration to retain floating substances in the water.

Stage 4: The membrane filter is a semi-permeable membrane with 8-12 Angstron pores that retains 95-98% of bacteria, viruses and heavy metals in the water and is discharged from the waste water part of the membrane to the drainage.

Stage 5: The last carbon filter (post carbon) passes the water through the carbon filter for the last time and delivers clear and extremely safe drinking water to our clean water tap on the sink.

POINTS TO CONSIDER BEFORE DEVICE INSTALLATION

Water purification equipment operating water temperature mi-nimum 5 ° C and maximum 40 ° C between. There is a risk of freezing in operation below 5 ° C, as well as the risk of damage to the filters above 40 ° C. For the installation of water purification equipment, it is necessary to choose a suitable place first.

When choosing the location, the proximity of the RO device to the cold water line and drainage should be taken into consideration and sufficient space should be left to work during intervention and filter changes in case of malfunction.

The water purifier is designed for city mains water with an inlet conductivity of max. 600 ppm and turbidity of max 3 NTU and waters with characteristics close to mains water properties. If the raw water source and characteristic of the raw water that the system is intended to be used is unknown, the raw water should be analyzed and its suitability for the system should be checked.

When used outside the limit values specified in the technical specifications section of the user manual, the desired quality of product water will not be obtained. The inlet pressure of the water purifier varies between 3.5 to 6 bar (350,000 to 600,000 Pascal) in non-pump water purifiers. In water purifiers with pumps, this value ranges from 1 to 6 bar (100,000 to 600,000 Pascal). The optimum operating pressure is usually set at 3.5 bar (350,000 Pascal). If the inlet pressure exceeds 6 bar (600,000 Pascal), it may be necessary to install a pressure reducer at the inlet.

In order for water purifiers to work correctly, it is important that the inlet pressure is within a certain range. In cases outside this range, performance problems may occur or the device may be damaged.

Do not insert the plug into the socket before the device is assembled. Our company will not be responsible for any problems arising from non-compliance with the above-mentioned warnings.

PURIFICATION DEVICE FLOW CHART

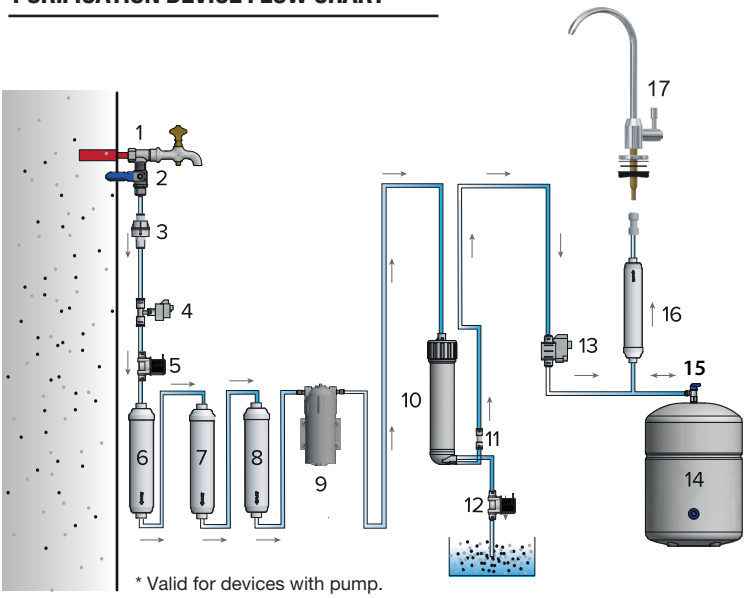

1. Receiving Line
2. Ball Valve
3. Pressure Reducer
4. Low Pressure Switch
5. Solenoid Valve
6. Sediment Filter
7. Block Carbon Filter
8. Block Carbon Filter
9. Pump
10. Membrane Housing
11. Check Valve
12. Waste Solenoid Valve
13. High Pressure Switch
14. Storage Tank
15. Tank Valve
16. Mineral Carbon Filter
17. Treatment Tap

BOX CONTENTS AND PRODUCT PARTS

1. Reverse Osmosis Device
2. Tap
3. Hausing
4. Inline 5 Micron Spun (Sediment) Filter
5. Inline Block Carbon Cartridge Filter (CTO)
6. Inline Granule Carbon Cartridge Filter (GAC)
7. Inline Coconut Post Carbon Filter
8. Membrane
9. Metal Pressure Balance Tank
10. Metal Ball Valve 1/4"
11. 75 GPD Dynamic Pump (available for models with pump)
12. 24 Volt 1.5 Ampere Adapter (available for models with pump)
13. Feed Water Connection Apparatus
14. Automatic Shut-off Valve
15. Hose
16. User Manual and Warranty Certificate

Hand Tools Required for Device Installation

(Must be kept out of the box.)

1. Drill:-

-Set of steel drill bits or diamond drill bits (12 mm bit).

- Selection of the appropriate drill bit according to the installation location and ground.

2. Herringbone File (Rasp):

- Herringbone file or rasp to be used in the assembly process.

3. Wrench (Frog Wrench):

- Wrench or frog wrench of appropriate size to be used for tightening or loosening nuts or bolts during assembly.

4.Falcata:

- Falcata to be used for necessary cutting and trimming operations.

5.Hose Shears:

- These tools and materials will help to perform the installation process safely and effectively. Additional tools or materials may be used according to the specific needs of the installation location and material.

DEVICE FEATURES

TECHNICAL SPECIFICATIONS

TECHNICAL SPECIFICATIONS	
Device Model	PALLAS PLUS ESTELLE
Voltage	100 -240 V ~
Frequency	50 / 60 Hz
Power	36 Watt
Max. Daily Water Production Capacity	~ 300 liters
Tank Volume	Approximately 8 liters
Device Dimensions	163x418x453 mm
Net Weight	8.15 Kg
RECOMMENDED INLET WATER VALUES	
Inlet Water Operating Pressure	0.1 MPa (1 Bar) - 0.7 MPa (7 Bar)
Inlet Water Temperature	5 - 38˚C
Max. Inlet Water Conductivity (TDS)	≤1000 PPM
PH Range	6,5 -9,5

* TDS : Total solids dissolved in water
* Valid for devices with pump.

ELECTRICAL FLOW DIAGRAM FOR PUMPED DEVICES

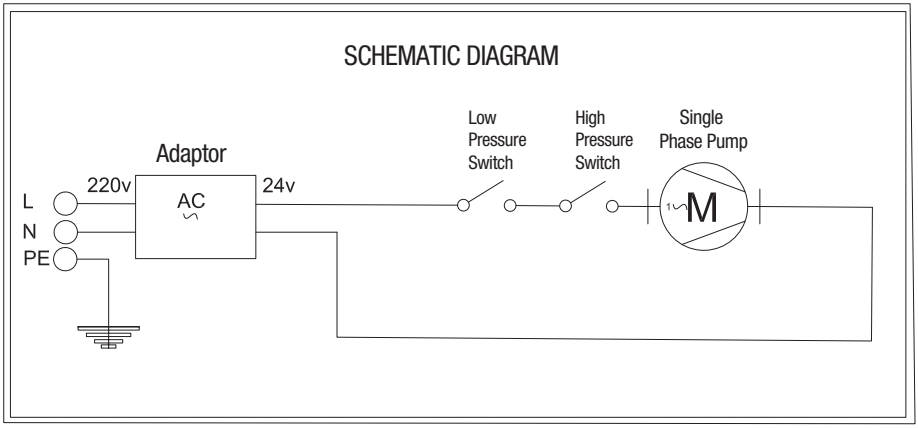

DIGITAL DISPLAY INFORMATION

1 Select Key:
It is the touch selection key used to reset PP, C1, RO, C2 filter change time indicators. It is activated when you press and hold the Select key for 3 seconds to reset the filter after the filter usage time has expired.

2 Reset Key:
The Reset key is the touch key used to reset the filter life. When you press and hold the selected filter for 3 seconds, the reset process takes place and the filter life indicators continue to light at the same time.

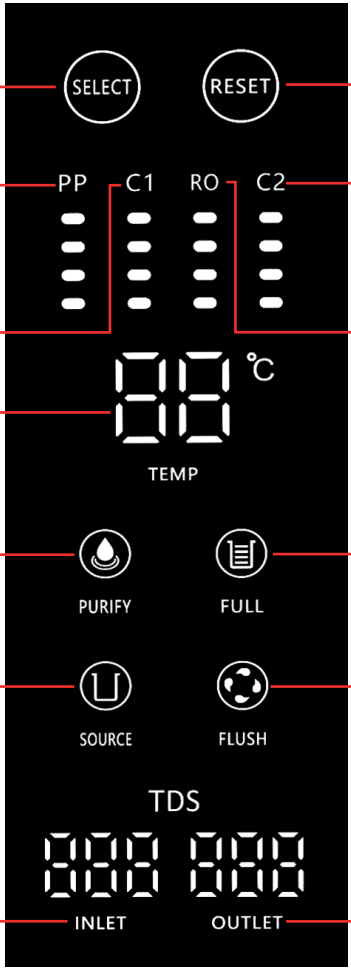

3 PP: Sediment is the life indicator of the filter. When the filter life reaches 6 months, the filter stages decrease and the indicator turns red.

6 C1(Pre Carbon): This is the life indicator of the pre-carbon filter. When the filter life reaches 6 months, the filter stages decrease and the indicator turns red.

TEMP: Indicates the temperature of the mains water entering the device.

PURIFY: It is the indicator that flashes when the device is purifying water.

SOURCE: If there is no water coming to the device from the mains input, it flashes with a continuous beep warning sound.

TDS INLET: Measures the conductivity of tap water, in PPM.

6 C2 (Final Carbon): The last carbon is the life indicator of the filter. When the filter life is 12 months, the filter stages drop and the indicator turns red.

5 RO: It is the life indicator of membrane filters. When the filter life is 24 months, the filter stages decrease and the indicator turns red.

9 FULL: After the water tank is full, the device indicates that the tank is full. The indicator lights up continuously when the tank is full.

11 FLUSH: When the device first starts up, the button is activated and fully opens the waste solenoid for 30 seconds. During this period, it removes the water entering the membrane from the waste line and returns to the waste cutter mode. It flashes continuously during this time.

13 TDS OUTLET: Measures the conductivity of treated water, in PPM.

- The lights on the display indicating filter change times calculate filter change times based only on the time the appliance is plugged in.
- If the device does not purify or does not give a warning, it enters standby mode after 1 minute. It exits standby mode when Select or Reset button is pressed.

Pre-Assembly Controls

Instructions for the installation site

Conditions related to water pressure
Inlet water pressure minimum 0.1 MPa (1 Bar)Inlet water pressure maximum 0.7 MPa (7 Bar)

- If the pressure value is below 0.1 MPa (1 bar), an external pressure boosting pump must be installed at the inlet of the device.

- If the pressure value is above 0.7 MPa (7 bar), a pressure reducer must be installed in the inlet line of the device.
*Too low or too high water pressure adversely affects the functioning of the device.

Installation area :

Space required for the installation of the device:
Height x Width x Depth :
45 x 45 x 50 cm
Electrical Connection Check:
For the electrical connection of the device, there must be an outlet at a maximum distance of 1.4 meters from the location of the device.
Water Conductivity:
Mains water conductivity (TDS) varies according to regions.The authorized service should measure the water conductivity and if the inlet water conductivity is between 700 ppm - 1000 ppm, the filter should be changed by taking half of the filter change times specified in this manual into consideration.

In this case, the membrane filter should be replaced every 6 months. Over 1000 Ppm mains water conductivity should not be used in places with mains water conductivity. In this case, water softening / treatment should be done in addition to the water coming to the inlet of the device.

Equipment required for assembly

Bench Drill Bits
For Metal Surfaces:
5 mm and 12 mm metal drill bit
Granite, For Marble, Hard Stone Surfaces:
12 mm diamond tipped punch.
Other Equipment
- Wrench or froggy
- Hose Cutting Shears (Utility Knife)
- Teflon Tape Needle-nose Pliers
- Flat and Phillips Screwdriver

Appliance Inlet Water Connection :

1.Before starting the installation, close the main mains valve or the valve on the incoming line of the water coming to the device.

2. After draining the water remaining in the pipes, install it to the mains supply water line by wrapping it with teflon tape in a sealed manner without 3/8 line receiving apparatus.

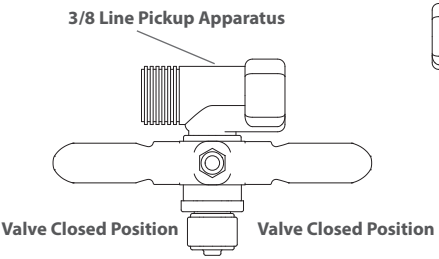

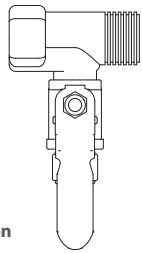

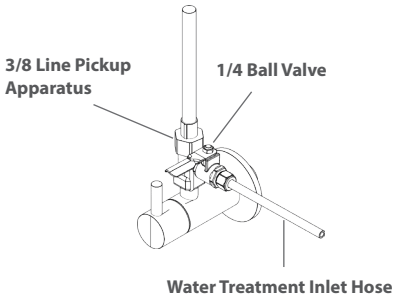

3. After checking the opening and closing distance of the metal ball valve, wrap teflon tape and mount it to the line receiving adapter.
4. 1/4'' Connect the water inlet hose to the inlet of the appliance to the metal ball valve. Make sure that the ball valve is closed.

FAUCET INSTALLATION

In the packaging of the device, there is a stainless faucet that you can mount on the countertop or sink. If the countertop or sink sink sink is to be drilled, the faucet should be mounted in a way that is suitable for use and aesthetics.
You can start drilling after checking the suitability of the bottom of the countertop or sink to mount the washer, nut and rector and taking measure ments.
Otherwise, it may cause you to drill the wrong hole.

If the place to be drilled is Marble, Granite, Ceramic:
Material to be used :
12 mm diamond tipped punch.

Drilling steps:
Start drilling with a 12 mm diamond tipped punch.

The drill should be operated at low speed and without impact.

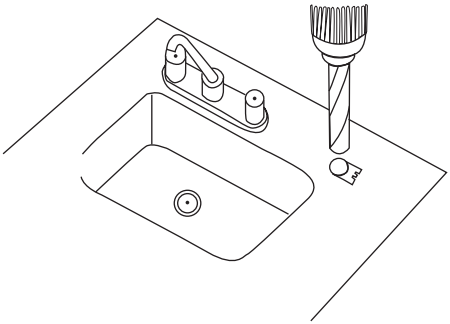

If the place to be drilled is laminate and sheet metal sink:

Material to be used:
5 mm metal drill bit and 12 mm metal drill bit

Drilling steps:
First, start drilling with a 5 mm metal drill bit. Then continue drilling with a 12 mm metal drill bit. The drill should be run at low speed and without impact.
If the worktop is made of cast concrete covered with tiles, a diamondtipped drill should be used with impact.
The connection thread length of the tap is 5.5 cm. If the worktop is thicker than 5.5 cm, additional threads should be added to the faucet as required. Then, insert the faucet into the drilled hole, adjust the gaskets and tighten the nuts.

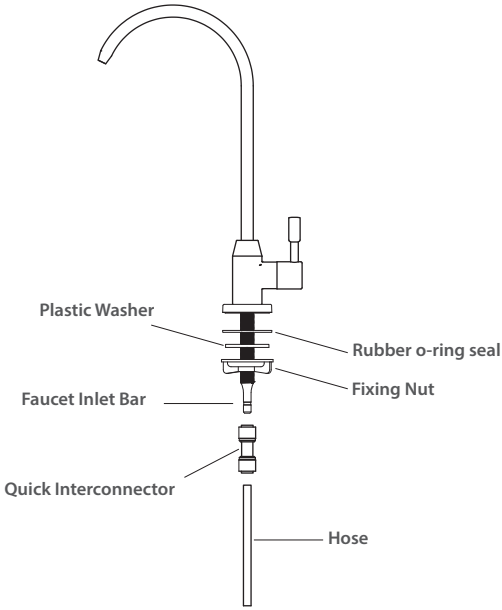

INSTALLATION, ASSEMBLY AND MAINTENANCE OF THE DEVICE

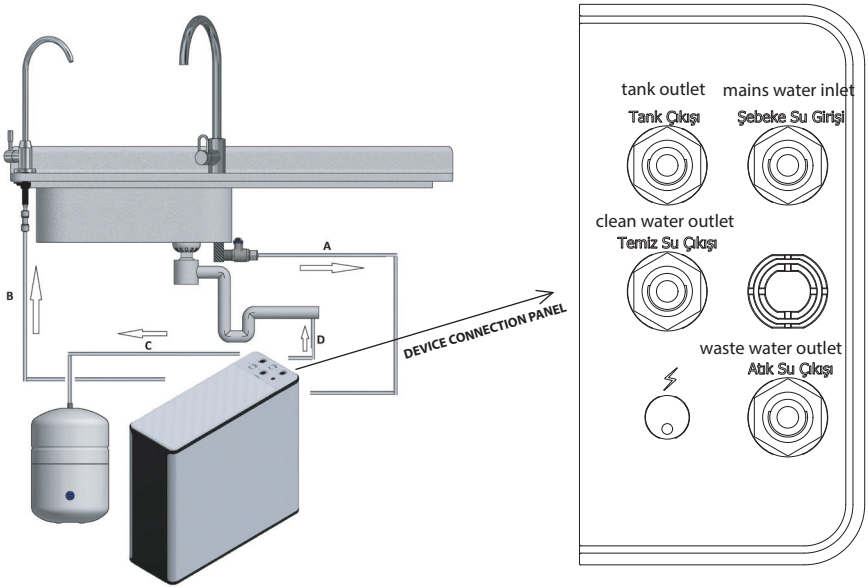

• **A -Water Inlet:**
Connect the “Mains Water Inlet” connection to the ¼ ball valve for the water inlet of the device.

• **B -Clean Water Outlet:**
Connect the clean water outlet to the RO tap. This step allows you to connect to a faucet to use purified water.

• **C -Waste Water Routing:**
Connect the “Waste Water Outlet” connection of the appliance to the waste water line drain under your sink. Connect the waste water hose to the bellows sink pipe with tape or plastic cable tie by inserting it 20 cm into the waste line so that it does not come out of the waste line. This connection ensures that the waste water of the appliance flows smoothly into the drainage system. If the waste line is not in the form of a bellows pipe, you can obtain a plastic clamp that can be attached to the fixed plastic pipeline from the authorized service. (Figure 1)

• **D -Waste Water Routing:**
Connect the appliance's “Waste Water Outlet” connection to the waste water line drain under your sink.

Connect the waste water hose to the bellows sink pipe with tape or plastic cable tie, inserting it 20 cm into the waste line so that it does not come out of the waste line.

This connection ensures that the appliance's waste water flows properly into the drainage system.

*The lengths of the connection hoses should be measured in such a way that they do not prevent the device from being taken out from under the counter and the hoses should be cut.

*After the installation of the device is completed, the filters must be washed before the first use and at each filter change.

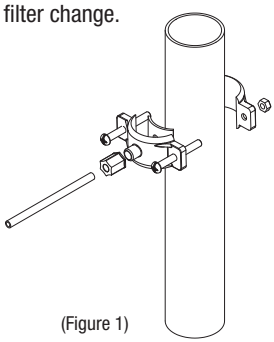

(Figure 1)

Filter Change and Filter Washing Procedure:

The replacement times of the filters used in this purifier are derived from data based on average mains water usage. If there are large differences between the quality and usage rates of the mains water used and the average indicators, there may be differences in the times when the filters actually need to be changed.
Regular maintenance and periodic filter changes are important to extend the service life of the device and maintain the efficiency of the device. This device contains several replaceable filters, which are essential for the effective reduction of dissolved fixed substances.
These filters need to be replaced at regular intervals to ensure that this system operates flawlessly.

Filter Change Periods

Filter Type	Filter Change Period
Sediment	6 months
Block Carbon (2 pcs)	6 months
Membrane	24 months
Mineral Carbon	12 months

In order to ensure the efficiency required for the reduction of harmful substances, the filters should only be replaced with original filters supplied by the appliance manufacturer.

If you will not use the appliance for more than 1 week, close the inlet valve. Unplug the electrical connection and open the clean water tap to allow the water in the tank to drain.

If you have not used your device for more than 1 month, it is recommended to change the mineral filter. If you have not used for more than 2 months, all filters should be replaced.

Filter Washing Instructions

Washing Sediment and Block Carbon Filters

1.To flush the sediment (filter 1) and 2 Block Carbon filters (filters 2/3) after the first installation, remove the hose from the outlet of the second Block Carbon filter (on the side marked Flow) to the pump and install a hose that can reach the sink.

2. Open the inlet valve and allow water to flow from the Block Carbon filter outlet into the sink for 5 minutes.

3. Then close the inlet valve, remove the hose for flushing and connect the hose between the filter and the pump to the filter.

Membrane Filter Replacement and Washing

1. Unplug the plug (1) and close the water supply valve (2)

2. Remove the hose from the membrane inlet (3). Open the reservoir lid by turning it counterclockwise with the help of the reservoir opening/tight ening wrench. (4).

3. Take out the old membrane inside the reservoir with the help of needle-nose pliers. (5)

4. Carefully insert the membrane into the reservoir, following the direction on the label, until it is completely seated. (6)

5. After inserting the membrane, tighten the lid with the wrench and attach the inlet hose.

6. To clean the newly installed membrane filter, disconnect the hose from the membrane outlet to the tank and mineral carbon filter and prepare the water from this hose to go to the sink.

7. Plug in the device and open the inlet valve. Flush the membrane for 15 minutes.

8. After the washing process is finished, reconnect the hose connections to the filter.

9. When installing the membrane filter, pay attention to the flow direction shown below. By following these steps, you can ensure the correct replacement of the membrane filter.

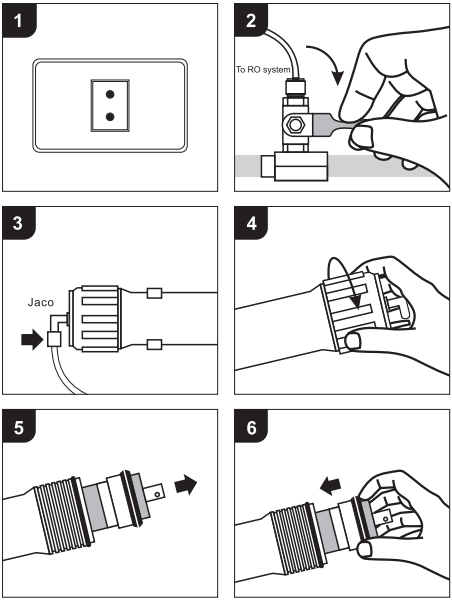

Mineral Carbon Filter Replacement and Flushing

1. Unplug the plug from the socket and close the inlet water and tank valve to the device.

2.Turn the clean water tap to the open position and allow the water inside the device to flow.

3. Disconnect the hoses on the mineral carbon filter water inlet and outlet side.

4. Attach the hoses you removed to the new filter, paying attention to the direction of water flow on the filter.

5. Plug in the device, open the inlet water valve and tank valve and let the water flow from the clean water tap for 5 minutes. The water from the tap should not be drunk during the washing process.

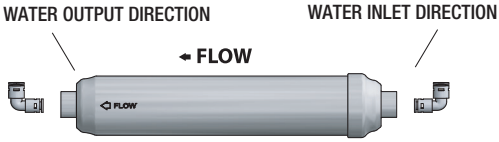

After the first washing of the filters, wait until the tank is full.
Drain the water from the first full tank without drinking.

WARRANTY CONDITIONS

MATTERS TO BE CONSIDERED BY THE CUSTOMER REGARDING THE WARRANTY

As the water purifier does not cover the elimination of malfunctions caused by misuse, the consumer should pay attention to the following-issues.

•Damages and malfunctions arising from usage errors.
•Damages and malfunctions during loading, unloading and transportation after delivery of the product to the customer.
•Voltage low or excess, damage and malfunctions due to reasons that may occur in the electrical installation.
•Malfunctions arising from the use of the product contrary to the points in the user manual.
• Membrane and filter changes are out of warranty. Consumables.
•The warranty period of the product is 2 (two) years against manufacturing defects.
• Exceeding the maximum time required for repair.

DAMAGES and MALFUNCTIONS DUE TO USAGE ERORS

• Loss of original parts of the device or disassem bly contrary to the instructions.
• Damages and malfunctions caused by physical impact, scratches, breakage, etc.
• Damages and malfunctions due to transportation and storage conditions.
• Damages and malfunctions caused by changing or damaging the electrical cable connections.
• Damages and malfunctions caused by painting or staining of any part of the product.
• Damages and malfunctions caused by attaching labels to the product that cannot be removed.
• Damage and malfunctions caused by natural disasters.
• Damages and malfunctions caused by operating the device with water below 5 degrees and water above 40 degrees.
• Damages and malfunctions caused by electrical networks.
• Damages and malfunctions caused by replacement of parts or materials in the device other than authorized service.
• Damage and malfunctions caused by placing foreign substances inside the product.
• Damages and malfunctions caused by incorrect location, placement, incorrect capacity selection, incorrect installation pipe connections and misuse.
• Damages and malfunctions caused by the use of non-original spare parts and accessories.
• Damages and malfunctions caused by operating the product without water or with insufficient water.
• Damages and malfunctions caused by the user's failure to perform periodic maintenance and controls.
• Damages and malfunctions caused by blockage of the wastewater drainage line and continued operation of the device in this way.

Defects considered out of the scope of warranty are repaired by our authorized services for a fee.

INFORMATION ON SITUATIONS THAT MAY BE DANGEROUS OR HARMFUL TO HUMAN AND ENVIRONMENTAL HEALTH DURING USE

• Make sure that the floor where the electrically connected devices are located is dry and insulated.
• There are no important issues that may pose a threat to the environment and human health during use.
• At the end of the service life of your device, send it for recycling.

LIFETIME OF THE DEVICE

The service life of the product is 10 (ten) years if it is operated and periodically maintained as specified in the user manual. Otherwise, this period may be shortened. As long as it is not exposed to high heat and sun, you can use the device efficiently for many years.

INFORMATION ON EFFICIENT USE OF YOUR DEVICE IN TERMS OF ENERGY CONSUMPTION

• If you do not use the Pumped Water Purifier for more than 3 days, turn the product off and unplug it from the socket.
• Be careful not to forget the faucet open.
• In case of low or excessive voltage, unplug the power plug in order to avoid both damage to your device and excessive electricity consumption.
• Avoid consuming water in vain.
• Do not place the device in direct sunlight or near devices that emit heat.

CONSUMERS' COMPLAINTS and OBJECTIONS

• In the event that the warranty certificate is not provided by the seller, the consumer may apply to the General Directorate of Consumer Protection and Market Surveillance of the Ministry of Customs and Trade.
• The consumer may apply to the consumer arbitration committee or the consumer court in the place where the place of residence is located or where the consumer transaction is made for disputes that may arise regarding the use of rights arising from the warranty.

ELECTIVE RIGHTS PROVIDED TO THE CONSUMER UNDER ARTICLE 11 OF THE LAW

1. If it is understood that the goods are defective, the consumer;
• Notify that you are ready to return what has been sold,
• Buying the goods and asking for a discount on the sale price in proportion to the defect,
• Request free of charge repair of the goods sold at the seller's expense, unless it requires an excessive expense,
• If possible, the consumer may use one of the optional rights to request the replacement of the sold product with a defect-free equivalent. The seller is obliged to fulfill this request preferred by the consumer.

2. The rights of the consumer to free repair or replacement of the goods with a defect-free equivalent may also be exercised against the manufacturer or importer. The seller, manufacturer and importer are jointly and severally liable for the fulfillment of the rights in this paragraph.

3. In case the consumer exercises the right to free repair,
• Failure again during the warranty period,
• Exceeding the maximum time required for repair,
• In cases where it is determined by the authorized service station, seller, manufacturer or importer with a report that repair is not possible, the consumer may request from the seller the return of the goods, the price reduction at the rate of defect or, if possible, the replacement of the goods with a defect-free equivalent.
The seller cannot refuse the consumer's request in such cases. In case this request is not fulfilled, the seller, manufacturer and importer are jointly and severally liable.

Energy saving is a new source of environmentally friendly energy.

FAULT DETECTION

The problem	Reason	Fault Elimination
DEVICE NOT WORKING	No water inlet	Check for water ingress
	There is no power to the device	Check electrical connection
	The adapter is burnt	Replace or call for service
	Low pressure switch is faulty	Replace or call for service
THERE IS NEITHER PRODUCTION NOR WASTE (NO PURIFIED WATER OR WASTEWATER FLOW)	Supply water connection is closed	Open the feed water valve
	Filters are clogged	Replace clogged filters with new ones
		The waste solenoid may be defective. Replace the solenoid
THERE IS WASTEWATER FLOW IN THE DEVICE BUT THERE IS NO OR VERY LITTLE PRODUCTION	Membrane filter clogged	Replace the membrane filter
	Check valve malfunction	Replace the check valve.
	Tank may have exploded	Replace the tank with a new one
THE WASTE IS SUGELED FROM THE TANK WHEN IT IS FULL	The solenoid valve has failed	Replace solenoid valve
	Check valve malfunction	Replace the check valve.
WATER LEAKING FROM THE DEVICE	Equipment is not properly connected	Check all connections
	Hose ends are cut crookedly	Remove the leaking hose again, cut the end straight and replace it.
	Gaskets are not seated	Put the gaskets in place
PURIFIED WATER TASTES BAD (BITTER TASTE AND ODOR PROBLEM)	The device may be due for a filter change	Change the filters according to the filter change instructions.
	The device has not been used for 1 month or more.	Replace the mineral carbon filter.
	The device has not been used for 2 month or more.	Replace all filters.
NO WASTE FROM THE DEVICE	The waste choke is blocked	Replace waste solenoid valve
	Filter maintenance is overdue	Change filters, especially the membrane filter
WATER COMES OUT OF THE FAUCET OF THE DEVICE	Tank may have exploded	Install a new tank

FREQUENTLY ASKED QUESTIONS

QUESTIONS

“How often should Water Treatment Filters be changed?”

It depends on the condition and quality of your mains water and how often you use the system. In all cases it is recommended to change your filters every six months. We recommend replacing the Post Carbon filter once a year and the original membrane no longer than two years.

“I just installed the cartridges and my water is cloudy, is this normal?”

After installing your new filters, you will need to run your water for a few minutes. Since carbon filters are made of natural materials, you may get cloudy black water for a while (10-15 minutes), keep your faucet open and close the tank valve, wait for the water to flow from the faucet until your water becomes clear.

“I don't use a lot of water, does this change the filter life?”

The change dates do not differ in the first three filters; while the water is being filtered, living organisms (microbes, bacteria) take up space in the filter, so the change date starts as soon as contact with the water is made.

“Can I install the product and change the filter myself?”

Yes, I can assemble the product and change the filters. However, any intervention outside the service will cause the device to lose its warranty. In the service operations to be carried out by the authorized service, your device will be under warranty and will be used safely.

WARRANTY

This document is allowed to be used by Directorate General of Consumer Protection and Market Surveillance, Republic of Turkey Customs and Trade Ministry in accordance with the Regulation of Practice Principles of warranty Certificate that is implemented by depending on Consumer Protection Law Numbered 6502

MANUFACTURER AND IMPORTER

TITLE : ESLİ END. ÜRÜN. PAZ. SAN. ve TİC. AŞ. O.S.B. 1. Kısım Antalya Bul No:36 DÖŞEMEALTI / ANTALYA

TELEPHONE / FAX / E MAIL : 0 850 532 8 786 & 444 7 099 esli@esli.com.tr

AUTHORIZED SIGNATURE / STAMP

ESLİ ESLİ END.ÜSTRİYEL ÜRÜNLER PAZARLAMA SAN. ve TİC. A.Ş.
Mrk: Antalya Organize San. Bölg. 1.Kısım Antalya Bulvarı No: 36/07190 Döşemealtı/ANTALYA
Tel.: 0242 417 76 20 (pbx) Fax: 417 76 30
Antalya Kurumsal V. D. 360 134 9167
Mersis No: 0380134910700001

SELLER

TITLE

TELEPHONE / FAX / E MAIL

INVOICE DATE / NO

DELIVERY DATE AND LOCATION

AUTHORIZED SIGNATURE / STAMP

PRODUCT

TYPE :

BRAND :

MODEL :

WARRANTY : 2 YEARS

MAX. REPAIR TIME : 20 WORK DAY

BANDEROL AND SERAL NO :

DEVICE LIFETIME: WATER TREATMENT DEVICE HAS 10 (TEN) YEARS LIFETIME. Purchased product has 2 (two) years of warranty.

TERMS OF WARRANTY

1) The warranty period starts from the delivery date and is 2 years.

2) Damages and defects resulting from misuse, high or low voltage, faulty electrical connection, transportation and handling after the delivery of the product and using the product contrary to t he instructions specified in the users manual during the warranty period (2 years) are not covered by the warranty. Determination of technical methods for repair or replacement of parts and the parts to be replaced is the responsibility of an authorised service.

3) If the consumer prefers the right of repairing the product free, the seller is liable to repair or to have it repaired without asking any charge under labour cost, cost of replaced part or any other title. The consumer may also use the free repair right against the manufacturer or importer. The seller, manufacturer and importer are severally liable for fulfilling the right of consumer.

4) In the event that consumer prefers to use the right of free repair and;

- The product re-fails during warranty period,
- The maximum time required for repair is exceeded,
- If repair is not possible and determined with a report by an authorized service, seller, manufacturer or importer, consumer may request from the seller to refund, discount at the defect rate or replace the product with non-defective products if possible. The seller cannot refuse the consumer's demand in such situations. If this claim is not fulfilled, the seller, producer and importer are severally liable.

5) The repair period cannot exceed 20 workdays. It starts from the date of notification to an authorised service if the warranty has not expired or from the date of delivery to an authorised service if warranty has already expired. In case of not being repaired within 10 workdays, the manufacturer or importer must supply a similar product to the consumer until the product is repaired. In the event that the product is defected within warranty perion, the days when the product remains in the service are added to warranty period.

6) Defects resulting from contrary usage to instructions specified in users manual are not covered by the warranty.

7) Consumer may apply to the consumer arbitration board or the consumer court where the consumer resides in or the products have been purchased for the disputes that may arise in connection with the exercise of the rights airising from the warranty.

8) In case the warranty certificate is not provided by the seller, the consumer may apply to the Customs and Trade Ministry, Directorate General For Protection of the Consumer and Market Surveillance.

RUGHT OF CHOICE PROVIDED TO CONSUMER WITH 11th ARTICLE OF LAW

1) If the product is found defective;

a) Consumer can renege on the contract by notifying the seller that they are ready to get back the product.

b) Consumer can retain the defective product and ask for discounts at the defect rate on sales price.

c) Consumer can ask for repair free in case it does not cost much.

d) Consumer can ask for replacing the defective product with another product if possible by using right of choice. The seller is obliged to fulfill this request wich is prefered by the consumer.

(2) Consumer can apply to the manufacturer or importer for repair or replacement of the defective product without any charge. The seller, manufacturer and importer are successively responsible for fulfilling the conditions based on the rights

(3) If consumerp refers to use the right of free repair and;

a) The product re-fails during warranty period,

b) The maximum time required for repair is exceeded,

c) If repair is not possible and determined with a report by an authorized service, seller, manufacturer or importer,

Consumer may request from the seller to refund, discount at the defect rate or replace the product with non-defective products if possible. The seller cannot refuse the consumer's demand in such situations. If this claim is not fulfilled, the seller producer and importer are severally liable.

CONSUMER APPLICATIONS FOR COMPLAINTS AND OBJECTIONS

- In case the warranty certificate is not provided by the seller, the consumer may apply to the Customs and Trade Ministry, Directorate General fro Protection of the Consumer and Market Surveillance.
- Consumer may apply to the consumer arbitration board or the consumer court where the consumer resides in or the products have been purchased for the disputes that may airse in connection with the exercise of rights arising from the warranty.

MADE IN
TÜRKIYE
MADE IN
REACH
RoHS
TÜV
AUSTRIA
CE
ISO 9001